820 AROCO SIDE PANEL

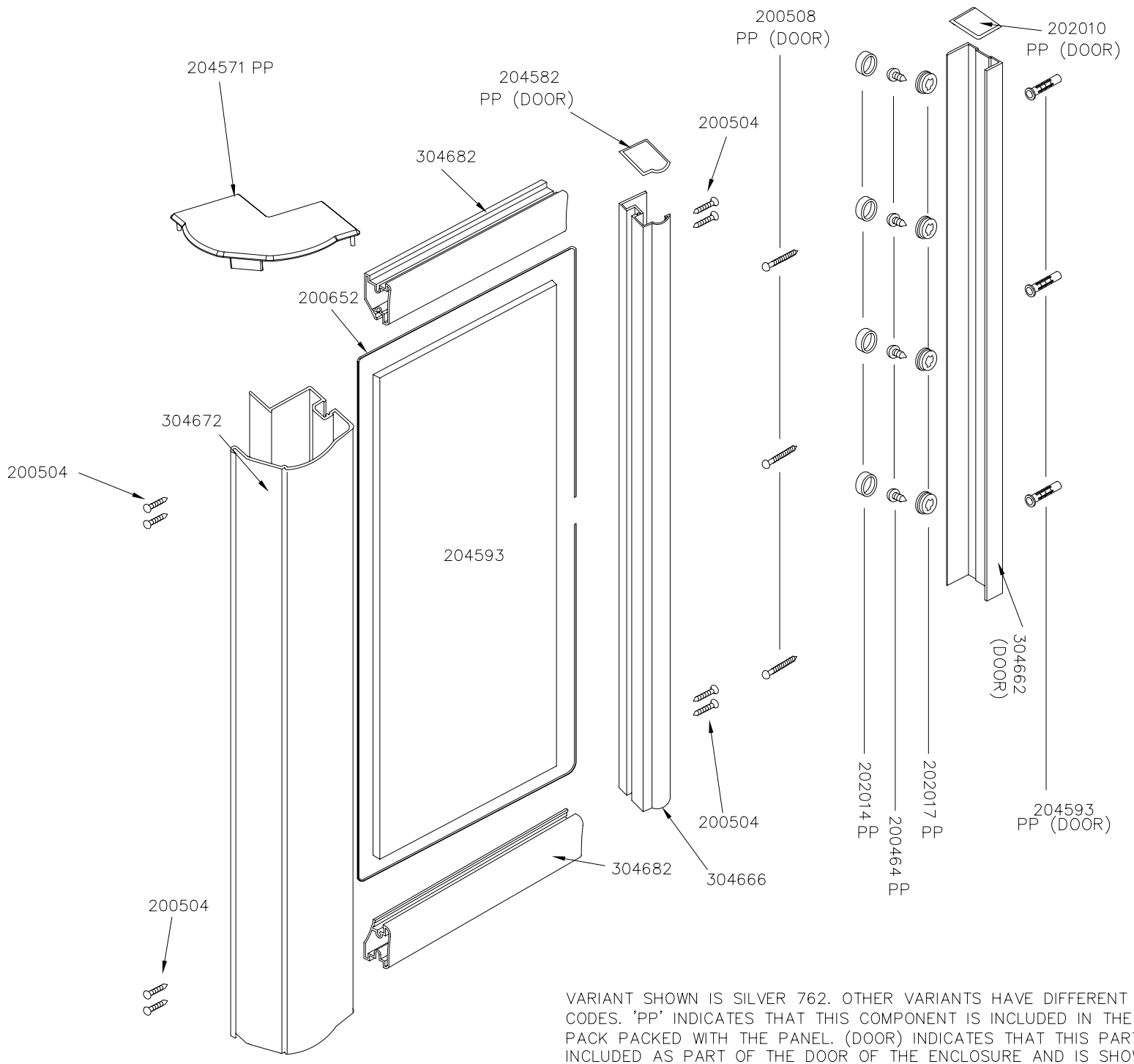

VARIANT SHOWN IS SILVER 762. OTHER VARIANTS HAVE DIFFERENT PART CODES. 'PP' INDICATES THAT THIS COMPONENT IS INCLUDED IN THE PARTS PACK PACKED WITH THE PANEL. (DOOR) INDICATES THAT THIS PART IS INCLUDED AS PART OF THE DOOR OF THE ENCLOSURE AND IS SHOWN FOR COMPLETENESS.

ISS.	DATE	DRN.	DESCRIPTION

CHECKED: APPROVED:

DATE DRAWN: 29/07/02